$~

* **IN THE HIGH COURT OF DELHI AT NEW DELHI**

Reserved on : 20th December, 2023

Date of decision: 8th May, 2024

\+ **CS(COMM) 706/2021, CC(COMM) 6/2022 & I.A. 17450/2021**

GUALA CLOSURES SPA ..... Plaintiff

Through: Mr. Pravin Anand, Ms. Archana Shankar, Mr. Dhruv Anand, Ms. Udita Patro, Ms. Sampurnaa Sanyal, Ms. Nimrat Singh & Mr. Devinder Rawat, Advs. (M. 9313399860)

versus

AGI GREENPAC LIMITED ..... Defendant

Through: Mr. Sandeep Sethi Sr. Adv. with Mr. Sanjeev Kumar Tiwari, Mr. Shatadal Ghosh and Ms. Sarah Haque Advs. (M. 7042079908).

CORAM:
JUSTICE PRATHIBA M. SINGH

JUDGMENT

Prathiba M. Singh, J.

1. This hearing has been held through hybrid mode.

Brief Background

2. The present suit has been filed by the Plaintiff – Guala Closures SPA seeking *inter alia* enforcement of patent rights under the Patents Act, 1970 (hereinafter, '*the Act*') and permanent injunction restraining the infringement of Indian Patent No. 349522 (hereinafter, '*IN'522/ suit patent*'), damages, accounts and delivery up. The Plaintiff - Guala Closures SPA, is an Italian company which is engaged in the manufacture of closures for spirits, wines, mineral water, beverages, olive oil and other condiments.

Signature Not Verified
Digitally Signed
By:RAHUL
Signing Date:10.05.2024
19:01:22

The Plaintiff claims to be a leading multinational company involved in this business and a global leader in the safety closures segment.

3. The present suit patent relates to IN'522, filed by the Plaintiff in India with the international filing date of 26th February, 2013. The patent is titled *'Tamper-Evident Closure with Tear Off Seal'* and was granted on 19th October, 2020 in India. The term of the patent ends on 25th February, 2033. The bibliographic details of the suit patent for which enforcement is sought is as under:

Application No.	6111/CHENP/2014
Date of Filing	12th August, 2014
Publication	1st July, 2016
PCT Application No.	PCT/IB2013/051532
PCT International Filing Date	26th February, 2013
Date of Priority	7th March, 2012
Title of Patent	Tamper-Evident Closure with Tear Off Seal
Patent Granted	IN 349522
Date of Grant	19th October, 2020
Current Assignee/ Patentee	GUALA CLOSURES SPA
Status	Active

4. Two post grant oppositions were filed in respect of the said patent by third parties, namely, Bericap India Pvt. Ltd. on 1st September, 2021 and VForm Technopak Private Limited on 12th October, 2021. However, the said post-grant oppositions have been dismissed by the ld. Deputy Controller of

Signature Not Verified
Digitally Signed
By:RAHUL
Signing Date:10.05.2024
19:01:22

Patents vide order dated 20th December 2023. Thus, the validity of the patent is confirmed by the Patent office.

5. The case of the Plaintiff is that it manufactures a large variety of caps and closures for alcoholic and non-alcoholic products. The plaint avers that the Plaintiff operates 30 production plants and 6 Research and Development centers, with 4680 employees. The Plaintiff's products are stated to be marketed in more than 100 countries and the Plaintiff has sales of around 17 billion closures per year. Though the Plaintiff is an Italian company, 90% of the turnover of the Plaintiff is stated to be generated from outside Italy. It has a consolidated turnover of 572 million Euros in 2020. It is averred that the Plaintiffs business is aimed at 4 segmented markets - (a) Spirits, (b) Wine, (c) Water and Beverages, and (d) Olive oil and Condiments, and comprises 4 product lines of closures as under:

i. Safety Closures (which are meant to curb counterfeiting and made tamper-proof);

ii. Roll-On Closures;

iii. Luxury Closures;

iv. Other Closures & Service.

6. It is averred that the products of the Plaintiff are protected by over 170 patents and designs registrations spread across the world in addition to a number of registered trade marks. The Plaintiff has also evolved and developed two more new type of closures, namely the NeSTGATE-connected Closures (using near field communication technology) and the Blossom Sustainable Closures (using recycled materials).

7. The Plaintiff states that it has a considerable presence in India since 1994 and has also undertaken several Corporate Social Responsibility

Signature Not Verified
Digitally Signed
By:RAHUL
Signing Date:10.05.2024
19:01:22

(*'CSR'*) activities. The Plaintiff has 1100 employees in India with four production plants located in Goa, Ahmedabad, Daman, and Dharwad. The closures are manufactured in India by the Plaintiff even for export purposes.

8. Defendant No.1- AGI Greenpac Limited in the present suit is also a manufacturer of closure seals. Defendant No.1 is stated to be a division of Defendant No.2 – HSIL Limited. The said Defendants are involved in the manufacturing of the tamper-proof security caps and closures and commenced business since 2017. The Defendants launched a new range of closures called *'the Voila Closure,'* which according to the Plaintiff infringes the Plaintiff's patent. The Defendant also has a patent granted i.e., IN326637 for its closure, the details of which are as under:

Application No.	817/KOL/2015
Date of Filing	27th July, 2015
Publication	26th August, 2016
Date of Priority	10th December, 2014
Title of Patent	Tamper Evident Security Closure to Access Opening of a Container, in Particular a Bottle
Patent Granted	IN 326637
Date of Grant	3rd December, 2019
Current Assignee/ Patentee	HSIL LIMITED
Status	Active

9. According to the plaint, the broad features of the Plaintiff's patented closures are:

(i) That it is a Tamper-Evident Closure, meaning thereby that if the closure or the container is tampered the same can be easily traced.

Signature Not Verified
Digitally Signed
By:RAHUL
Signing Date:10.05.2024
19:01:22

Thus this helps in maintaining the integrity of the product as also curb counterfeiting.

(ii) The closure has an outer capsule which is openable with a seal.

(iii) The first tear off seal removes one portion of the capsule, after tearing off. The outer capsule when torn off, reveals an inner cap joint at the neck with a further tear off seal.

(iv) Thereafter there is a second tear off seal. It is only upon the second tear off seal being removed that the cap can be opened and the contents of the container can be removed from the container for the purposes of consumption.

The two-level tamper proof closure is an exclusive innovation, as per the Plaintiff.

10. Upon coming across the Defendant's closures, the Plaintiff, issued a cease-and-desist letter on 28th June, 2021, asserting its suit patent, and demanding that the Defendant No. 1 cease the manufacture and sale of the infringing products. Subsequently, the Plaintiff received a response from Defendant No. 1's Counsel on 12th July, 2021, challenging the adequacy of the cease-and-desist notice, despite the Plaintiff providing an analysis of infringement along with the notice.

11. Vide letter dated 12th July, 2021, the Defendant No.1 contested the Plaintiff's allegations by stating that the Defendants' product does not have the characterizing portion of Claim 1 of the suit patent by providing the details of their product. Defendant No.1 in the said reply stated that their product is altogether different, and involves a proprietary technology which is the subject matter of another granted Indian patent IN 326637 *(IN'637)*.

Signature Not Verified
Digitally Signed
By:RAHUL
Signing Date:10.05.2024
19:01:22

12. Since no resolution could be arrived at and owing to the fact that the Defendant No.1 company had been producing similar closures to that of the Plaintiff, allegedly infringing multiple claims of the suit patent, the present suit was instituted. The application seeking interim injunction was heard and is being decided by way of the present judgment.

Submissions

13. Mr. Pravin Anand, ld. Counsel for the Plaintiff explained the various elements of the patented Tamper-Evident Closure *(hereinafter, 'Plaintiff's product')* by different slides. He also submits that affidavits of experts have been filed by both the Plaintiff and the Defendant.

14. It is the submission of Mr. Anand, ld. Counsel for the Plaintiff that the only additional feature of the Defendants' product is the sealed round ring facilitating the opening of the outer capsule which is also covered by the suit patent. He asserts that the addition of this feature in the Defendants' product would not obviate infringement, as all the remaining elements of the claims are present in the Defendants' closures. For the said purpose, reliance is placed on pages 9 and 10 of the complete specification of the suit patent.

15. The Plaintiff also contends *malafide* conduct on the part of the Defendants, by highlighting that one of the key personnels of the Plaintiff had joined the Defendant No. 2 – HSIL. The said allegations also extend to the Defendants' purported replication of the Plaintiff's advertisement materials. Further, Mr. Anand, ld. Counsel emphasises that "*Guala*" and "*Voila*" – the words and the marks are deceptively similar, though he conceded that the present suit is one for patent infringement, and not of trademark or passing off. He also contends that the Defendants had also

Signature Not Verified
Digitally Signed
By:RAHUL
Signing Date:10.05.2024
19:01:22

copied the Plaintiff's advertisement, including the title of the various descriptions of the highlighted features of the products.

16. In respect of the patent granted in favour of the Defendants, Mr. Anand submits that the same would not result in a conclusion that the suit patent is not violated/infringed. He further argued that patent rights are negative rights, and not a positive right for manufacturing the patented product. Reliance is placed on ***Hindustan Lever Limited v. Lalit Wadhwa [2007 (35) PTC 377 (Del)]***, ***Cantrell v. Wallick [117 US 689 (1886)]***, and an article by Arnold B. Silverman – titled ***'Relationship between Basic and Improvement'*** **[JOM 47 (1) (1195) page 50].**

17. Furthermore, in respect to the averment of the Defendants that the capsule is not present in the Defendants' product once the tear off is made, it is submitted that even if one portion of the capsule remains attached post-usage and is not removed, the embodiment in the suit patent would cover the said feature as well. The detachment of the outer capsule, is not an essential element of the claim. He further submits that irrespective of whether the first tear off portion is attached or not, the claim would cover the Defendants' product in as much as Claim-1 cannot be read in a narrow manner and by applying the 'Doctrine of Equivalence', infringement is established. Insofar as first tear off is concerned, examples shown in the patent show a complete tear off cap. However, the description in the patent itself covers more embodiments, and reliance is placed on page 8 of the complete specification in this regard.

18. Lastly, in respect of non-working of the suit patent the Plaintiff, Mr. Anand counters the same by asserting that the Plaintiff has made substantial investments in India, including manufacturing closures for export. Insofar as

Signature Not Verified
Digitally Signed
By:RAHUL
Signing Date:10.05.2024
19:01:22

the question of manufacturing closures in India, the Plaintiff has submitted that the same would be commercially launched by the Plaintiff in India. Further, it is highlighted by the Plaintiff that the total production of the Plaintiff is to the tune of 2 billion plus closures, and thus, it cannot be held that the Plaintiff is guilty of non-working. Without prejudice to the said contention, it is also argued that the allegation of non-working would not justify infringement of a patent. Reliance is placed on ***Cipla v. Novartis; 2017 (70) PTC 80*** to state that insufficient grounds have been made by the Defendant, which in any case cannot be used for justifying patent infringement.

19. Submissions have been made by Mr. Sandeep Sethi, ld. Senior Counsel for the Defendants. At the outset, Mr. Sethi, ld. Sr. Counsel submits that the Plaintiff's closures have not been commercially used on any container either in India or abroad. Thus, the Defendants are making the submissions on the basis of the closures handed to them by the ld. Counsel for the Plaintiff.

20. Initially, Mr. Sethi highlights, what in the understanding of the Defendants are the distinctive features of the Plaintiff's closure, emphasizing the feature of the grooves created within the mould on the inner side of the Plaintiff's closure, prior to the first circular ring. According to Mr. Sethi, ld. Sr. Counsel, this necessitates corresponding matching grooves in bottles for compatibility. In contrast, he highlights that the Defendants' closure offers versatility, as it can be utilized across a spectrum of bottle types without such specific requirements.

21. Mr. Sethi, ld. Sr. Counsel also delineates the structural composition of the Defendants' closure, an inner layer consisting of a cap a perforated strip

Signature Not Verified
Digitally Signed
By:RAHUL
Signing Date:10.05.2024
19:01:22

and a longer neck over this composite inner layer consisting of three elements including an outer cap which can be removed by means of a ring which can be torn out. Upon the said ring being detached from the outer cap, the outer layer can be fully removed from the inner cap itself. He submits that this feature does not exist in the Plaintiff's closure. Further, to substantiate the same, Mr. Sethi, ld. Sr. Counsel stresses on the integration of three distinct components in the inner part of the Defendants' closure which are:

(a) the topmost cap;

(b) the perforated strip in between; and

(c) the neck.

22. Ld. Senior Counsel asserts that elements (a) and (b) of the Defendants' closure cannot be detached from each other, nor can the closure be removed from the bottle without pulling out the perforated strip. Upon pulling out this strip, it becomes evident that the Defendants' strip is smooth and only perforated at the edges, whereas the Plaintiff's strip is grooved and also has perforations. According to ld. Sr. Counsel the Plaintiff's novelty lies in this strip, which is completely different from the Defendants' perforated strip.

23. Mr. Sethi also highlights that Claim 1 of the suit patent does not relate to the entire closure, but only to the tamper evident seal of the inner cap, of the second tear off seal. Furthermore, he attempts to accentuate the stark disparities between the tear-off tabs in both the Plaintiff's and Defendants' closures, elucidating the following distinctive characteristics:

- the tear-off tab in the Plaintiff's closure features internal grooves that align with corresponding grooves on the bottle, facilitating

Signature Not Verified
Digitally Signed
By:RAHUL
Signing Date:10.05.2024
19:01:22

attachment. Conversely, such grooves are absent in the Defendants' tear-off tab.

- while the Plaintiff's tear-off tab is affixed to both the inner tab and the bottle, detaching only after the outer capsule is removed, the Defendants' tear-off portion is solely connected to the inner tab, with no attachment to the bottle.
- presence of additional rings with vertical divisions in the pull-out section of the Defendants' closures, enabling bidirectional movement, contrasting with the Plaintiff's closure, which permits removal only in one direction due to non-uniform vertical divisions.

Moreover, Mr. Sethi, ld. Sr. Counsel emphasizes that in the first independent claim of the suit patent, grooves in the tear-off tab are linked to those in the bottle via attachment means, as illustrated in figure 5B of the suit patent.

24. In respect of the ancillary allegations, Mr. Sethi, ld. Sr. Counsel submits that the Defendants had their closures designed in Germany and commercially launched them in India in 2017. He has provided sales figures and manufacturing data to demonstrate the substantial sales of the Defendants' closures that have been made. On the basis of the sales figures, he submitted that one closure of the Defendants is sold at Re. 1.35/-. Further, he emphasizes that the Defendant has been granted a patent in 15 jurisdictions, that too, despite the suit patent being cited as a prior art to the corresponding patent application of the Defendants in the EPO. Mr. Sethi highlights that the EPO granted the said patent to the Defendants, after overcoming the objections in respect to the suit patent itself. The Defendant has also been granted a Patent in India.

25. Mr. Sethi submits that the grant of separate patents for the Plaintiff

Signature Not Verified
Digitally Signed
By:RAHUL
Signing Date:10.05.2024
19:01:22

and the Defendants closures in itself would show that the two products are conceptively and functionally different, though, broadly the application of both the Plaintiff's and the Defendants' patents are similar, i.e., to prevent adulteration and tampering of the content of the bottle/container where the closures are used.

26. On 3rd July, 2023, Mr. Sandeep Sethi, ld. Sr. Counsel for the Defendants submitted that pursuant to the order dated 25th March, 2023, one of the closures of the Plaintiff which was handed over to the Defendants was one which did not have grooves on inner side on the neck of the closure. He submits that the new product now consists of grooves in the neck of the closure. He further submitted that as a matter of practical application, the Plaintiff's closure does not fit into any bottle, if there are no corresponding grooves on the bottle, the closure would be a misfit in contrast with the Defendants' closure which would fit into any bottle.

27. In respect of the construction of the Plaintiff's closure, it is submitted that the same has two broad parts, one is the inner part and the second is the outer part. The outer part also has two further sub-parts, one being a perforated pull-down tab and the tearing up of the inner part by using the tab. He submitted that both in case of the perforated pull down and in the tearing of the inner tab, the Defendants' closure is different. Mr. Sethi, highlights that in the Plaintiff's closure, the perforated pull-down tab moves half a distance and tears/removes the outer part only on one side. Further, the lower part then remains fixed to the neck of the bottle. He further submitted that in contrast, in the case of the Defendants' closure, the perforated pull down is tear-able on both the sides. He asserted that this is a distinguishing feature of the Defendants' invention. Insofar as the inner tab

Signature Not Verified
Digitally Signed
By:RAHUL
Signing Date:10.05.2024
19:01:22

is concerned, the horizontal grooves, the striations and the perforations, the nature of the tab is completely different.

28. On question of infringement of the suit patent, it is submitted by Mr. Sethi that the characterization of the first independent claim of the suit patent is in such a manner that it would not map *qua* the Defendants' pull-out tab. He submitted that the two distinguishing features would completely establish the case of the Defendants for non-infringement as the structure of the two closures itself are different. Further, Mr. Sethi, contends that the manner in which the functions of the embodiments of the suit patent have been explained in detail in the specification would show that the manner of functioning of the Defendants' closures is not the same and hence the product is not infringing. In case of Defendants closure, the outer enclosure is the pull-out enclosure whereas in case of Plaintiff, it is a pull down enclosure. Reference is made to Claim 8 and Claim 11 of the suit patent and page 24 and specification of the suit patent, in support of the said assertions

29. Mr. Sandeep Sethi, further placing reliance on the second aspect of Claim 1 of the suit patent i.e. "*having fixing means (31) for fixing the Capsule (30) to the container (2)*", highlighted that fixing means as contemplated in the drawings as also in the claim is absent in the Defendants' closure. He relies on page 22 of the complete specification to support this contention. Finally, in respect of the suit patent, Mr. Sethi highlights that the fixing means in the suit patent are two in number - one at the closure and second fixing means with the neck of the bottle which is clearly absent in the Defendants' closure. He specifically highlights the fact that this second feature, which is a distinguishing feature, is not part of the claims of the suit patent.

Signature Not Verified
Digitally Signed
By:RAHUL
Signing Date:10.05.2024
19:01:22

30. Without prejudice to his submissions in respect of non-infringement, Mr. Sethi, ld. Sr. Counsel, has argued that no injunction would be liable to be granted inasmuch as the balance of convenience would be in favour of the Defendants. On behalf of the Defendants, it is stressed that the affidavit of Mr. Paras Kumar, the Authorised Representative, would reveal that the Defendants have made sales of more than 124 crore pieces of closures with a sale value of Rs.175 crores from the Financial Year 2017-2018 till 2022-2023. In comparison, at the time of filing of the present suit, the Plaintiffs did not have sale of a single closure manufactured as per the patent and only one purchase order has been filed for 1,00,000 pieces post the filing of the suit. This according to the Defendants would show that the Defendants have already made substantial investment in the manufacture of the closures. Thus, balance of convenience would be in favour of the Defendants and irreparable harm would be caused to the Defendants if any interim injunction is given.

31. The allegation of Mr. Davide Aiudi, General Manager, Guala Closures, asserting that a senior manager from the Plaintiff company resigned in 2013 and subsequently joined Defendant No.1, thereby initiating the Defendants' closure manufacturing, is refuted by the Defendants in the reply affidavit deposed by Mr. Paras Kumar. According to the Defendants, paragraph 13 of the reply affidavit specifies that closure manufacturing of the Defendants commenced in 2011 when the Defendants established their closures division through the acquisition of M/s Garden Polymers Pvt. Ltd. in August 2011. Therefore, the contention that the initiation of closure manufacturing by the Defendants was prompted by the employment of a former Plaintiff employee is baseless. Further, in support of the same, the

Signature Not Verified
Digitally Signed
By:RAHUL
Signing Date:10.05.2024
19:01:22

Defendant also points out that the Defendant's closure are manufactured on the basis of technology obtained from M/s. Krallmann Holding and Verwaltungs GmbH vide cooperation framework agreement dated 13th October, 2014. The said agreement relates to technology of manufacture of closures as is clear from Clause 6.1. it is further, submitted that the inventor has also given an affidavit to the effect that he has assigned the rights to the company as of 16th December, 2014.

32. In the Rejoinder submissions Mr. Pravin Anand, ld. Counsel for the Plaintiff once again emphasised that irrespective of the counter arguments by the Defendants, the position which does not change is that the Defendants' closure is infringing the suit patent. Mr. Anand, ld. Counsel highlights that the mere addition of certain additional features in the Defendants' closure cannot lead to a finding of non-infringement:

i) that the capsule of the Defendants' closure is fully removable but the Plaintiff's capsule is partially removable.

ii) that the Defendant's capsule is not directly attached to the bottle whereas in the Plaintiff's case, it is directly attached to the bottle.

iii) that the manner in which the tear of seal can be torn i.e. clockwise and anticlockwise in the Defendants' closure and the Plaintiff's tear of seal is capable of being torn off only in one direction.

iv) that the Defendant's closure has a first tear of seal which has a ring on the top which is absent in the Plaintiff's product.

33. Mr. Anand contends that on the basis of the above additional features, the Defendants have argued non-infringement but the stand of the Plaintiff is

Signature Not Verified
Digitally Signed
By:RAHUL
Signing Date:10.05.2024
19:01:22

that however, that would be the incorrect approach. According to ld. counsel in patent infringement, it is the Plaintiff's patent which has to be mapped on to the Defendant's product. The so-called additional features and differences which are sought to be brought out between the two products would not have any bearing on infringement as even with those additional features, the infringement of claims would still be attracted. In support of the same, Mr. Anand argues that in Claim 1 of the suit patent, it is highlighted that the removal of at least one portion of the capsule is in the language of the claim. Thus, the fact that both portions of the capsule would be removable, would not obviate infringement. Secondly, Claim-1 uses the language that '*the fixing means exist for fixing the capsule to the container*', therefore, it does not matter whether the capsule is attached to the bottle directly or indirectly. By giving such examples from the Claims, it is submitted that if the Claims of the Plaintiff's patent are compared to the Defendants' product, the same would still constitute infringement and the differences between the two products would not be relevant.

34. Insofar as the patent granted to the Defendants by the EPO is concerned, reliance is placed upon the reply to the office action of the EPO where, in the response to the EPO's office action, the Defendants have sought to create a difference between the Plaintiff's and the Defendants' closure which was the basis for the grant of the patent. He submitted that the settled legal position is, in respect of the patented product, that an improvement patent can still be obtained by a third party. However, the said third party would still have to obtain consent of the first patentee in order to manufacture and market the product. He relied upon the decisions in ***Cantrell v. Wallick; 117 US 689 (1886)***, ***HLL v. Lalit Wadhwa; 2007 (35)***

Signature Not Verified
Digitally Signed
By:RAHUL
Signing Date:10.05.2024
19:01:22

PTC 377, Phillips v. Awh Corp. 1303, Patents for Chemicals, Pharmaceuticals and Biotechnology by Philip Grubb and Peter R. Thomsen and Arnold B Silverman-Relationship between Basic Improvement; JOM 47 (1) (1995) in support of the same.

35. Mr. Anand also stresses that the balance of convenience is fully in favour of the Plaintiff as the Defendant had an obligation to clear the way before manufacturing the infringing product as they had notice of the Plaintiff's patent which was filed in 2014 and published in 2016. In addition, the Plaintiff's patent was also cited in the Defendant's patent in the EPO. He further submits that Plaintiff is a leading manufacturer of closures in the spirits industry. The first closure which was manufactured by the Plaintiff was the patented closure which had a patent between 1998 to 2018, and 2.5 billion pieces per year of these closures were sold by the Plaintiff. He further submits that the second patent of the Plaintiff, i.e., the suit patent, is an evolution from the first. Double Tamper Evident Closures, which are patented, are being manufactured and sold by the Plaintiff. However, the volumes may not be high owing to severe competition from the Defendants, who copied the closures of the Plaintiff.

36. Mr. Anand also questions the Conduct of the Defendants and submits that the same is not *bonafide* owing to the following factors:

a) the General Manager of the Plaintiff joined the Defendant No.1 company after which the patent was sought by the Defendants;

b) the Defendants have not just infringed the patent but has also copied the trade mark by using a deceptively similar mark 'Voila';

c) the advertisement of the Plaintiff was also replicated by the Defendants.

Signature Not Verified
Digitally Signed
By:RAHUL
Signing Date:10.05.2024
19:01:22

According to Mr. Anand, these factors clearly point to the fact that the Defendant was trying very hard to portray itself as being a market leader for manufacture of closures and as a replacement product to the Plaintiff's closures. However, the product marketed by the Defendants is not a *bonafide* product as the same is infringing the suit patent. Reliance is placed on decisions in ***Merk v. Glenmark, 2015 (63) PTC 257 [Del] (DB) Para 87 and Teva UK Limited v. Chiesi Farmaceutici Spa [2020] EWHC 1311 Para 22*** in this regard.

37. In surrejoinder submissions, Mr. Sandeep Sethi, ld. Sr. Counsel for the Defendants claimed that in the response to the EPO's office action, the Defendants had changed the claims disclosing the closure to what the product is today and in view of the said differences between the suit patent and the Defendants' closure, the EPO granted the patent. Since the said difference is fully acknowledged by the EPO, there cannot be any finding of infringement against the Defendants. Finally, he stresses to say that the differences being the essential features of the Claims of the suit patent and Defendants' patent, there cannot be any infringement of the Plaintiff's patent as the Defendants are implementing their own patent.

Analysis and Findings

38. The Court has heard ld. Counsel for the Plaintiff and also ld. Sr. Counsel for the Defendants at length, and also conducted hearings even on Saturdays, in order to complete the detailed submissions of the Plaintiff and the Defendant. The emphasis of the submissions has been on the question of infringement. No submissions have been made on the question of validity of the patent. Thus, the present order on the interim injunction application is being passed on the issue of infringement only.

Signature Not Verified
Digitally Signed
By:RAHUL
Signing Date:10.05.2024
19:01:22

39. Mr. Pravin Anand, ld. Counsel for the Plaintiff, has dissected the elements of the patented Tamper-Evident Closure, elucidating how each feature corresponds to the claims asserted in the suit patent. He presents an argument that despite any additional features introduced by the Defendants, infringement remains evident when the suit patent is mapped onto the Defendants' product. *Per contra*, Mr. Sandeep Sethi, ld. Sr. Counsel representing the Defendants, has endeavoured to demonstrate distinct differences between the Plaintiff's and Defendants' closures, asserting that these variations are crucial for claim construction. Therefore, in the understanding of the Court, resolving the question of infringement hinges upon the examination of the claim language and how it aligns with the structural and functional aspects of the respective closures.

40. Claim construction is generally the first and foremost exercise carried out in adjudicating patent infringement suits, especially when confronted with products like tamper-evident closures which are based on mechanical features. The same has also been highlighted in '*Chapter 9: Construction of the Specification and Claims*', in ***Terrell on the Law of Patents***, Eighteenth Edition. As per Terrell, determination of the actual scope of the Claims of a complete specification, is one of the most significant issues, in litigation involving patents. Once the scope of the claims is clarified, questions regarding infringement and invalidity often find swift resolution. Therefore, it has been highlighted that patentees must navigate a delicate balance, as they have to assert their claim in such a way that the Claim is broad enough to cover infringement while not excessively broad to avoid coverage by prior art. On the contrary, it has been highlighted that Defendants, employ a '*squeeze*' argument, often claiming that if a claim encompasses their

Signature Not Verified
Digitally Signed
By:RAHUL
Signing Date:10.05.2024
19:01:22

activities, it must also encompass prior art. This highlights the pivotal role of claim construction in patent litigation, shaping the foundation for determining infringement and assessing patent validity. The relevant extract from Terrell is set out below:

> *" **Determination of the true construction of the claims of a patent specification, which are to be read in the context of the specification, is commonly one of the most significant issues, if not the single most significant issue, in litigation involving patents**.*
>
> *Once the scope of the claims is ascertained, the question of whether or not there has been infringement, and whether or not a cited piece of prior art anticipates the claim, can often be answered immediately. Similarly, construction is an essential step in considering other grounds of invalidity.*
>
> *For the patentee, it is often a case of treading a line between contending that the scope of a claim is broad enough to cover an alleged infringement, but sufficiently narrow so as not to cover the prior art. Defendants meanwhile will often run a so- called "squeeze" argument, namely that if the claim is broad enough to cover their activities, then it is also broad enough to cover the prior art, or what is obvious from the prior art."*

41. As per Rule 2(c) of the High Court of Delhi Rules Governing Patent Suits, which defines 'Claim construction brief', claim construction can be understood to be the process of breaking down the construction of each of the terms contained in the Claims, their meaning thereof, as also the overall scope and effect of all the Claims relied upon. In the present suit, both parties have presented compelling arguments regarding the interpretation and application of claim language vis-à-vis the features of their respective

Signature Not Verified
Digitally Signed
By:RAHUL
Signing Date:10.05.2024
19:01:22

closures. Thus, delving into claim construction would provide the necessary framework for evaluating the merits of each party's arguments and ultimately determining whether the Defendants' closures infringe upon the Plaintiff's patent rights.

Claim construction

42. As per the Complete Specification, the suit patent describes a tamper-evident closure for a container. The closure includes a cap to seal the container's mouth and a capsule fixed to the cap with tamper-evident features. Further it includes tear-off seals that provide evidence of the closure's initial opening. Notably, the closure has two tear-off seals:

- one for removing a portion of the capsule and
- another for detaching the cap from the container.

The closure's design allows irreversible movement through different configurations as the seals are torn off, ensuring evidence of tampering, if any. Additional features of the suit patent include attachment means for the cap, fixing means to prevent displacement, and visibility of the torn-off portion of the second seal. As described in the granted patent specification, the technical solution provided by the suit patent is a closure with features that hinder fraudulent restoration while offering evidence of tampering, thereby improving security and integrity in product packaging and preventing counterfeit activities. The said closures complicate the restoration to its pre-opened state and thus would be irreversible, once undertaken.

43. Before proceeding to the analysis, the independent Claim of the suit patent is analysed to ascertain the features of the patent. Independent claim 1 of the suit patent is reproduced hereinbelow:

Signature Not Verified
Digitally Signed
By:RAHUL
Signing Date:10.05.2024
19:01:22

"*Claim:1:*
A tamper-evident closure (1) for a container (2) having a mouth (3), said closure (1) comprising: -
- a cap (10) for closing the mouth (3) of the container (2),
- a capsule (30) associated outside with said cap (10) and having fixing means (31) for fixing the capsule (30) to the container (2),
-tamper-evident means for providing evidence of first opening of the closure (1), wherein said tamper-evident means comprise a first tear-off seal (36) configured to remove at least one portion of said capsule (30), once it has been torn off.
characterized in that:
said tamper-evident means comprise a second tear-off seal (40) for attaching the cap (10) to the container (2) and allowing removal of the cap (10) from the mouth (3) of the container (2), once it has been torn off."

The features of the product as encompassed in Claim 1 are as under:

- There are two seals -a first tear off seal (36) and a second tear off seal (40). The removal of both seals makes any tampering evident.
- The bottle also consists of a mouth (3), container (2), closure (1) and cap (10).
- The closure (1) includes a capsule (30) and is linked to cap (10).
- The cap(10) is linked to the container (2) through fixing means (31).
- In this invention, there exists no mechanism for accessing and tearing off the second tear off seal (40) without tearing off the first seal (36). Upon removal of the first tear off seal (36), the invention moves from the first configuration to the second configuration and the capsule (30) which is configured to externally surround second tear-off (40a), does the same. ***(Pg 8, Line 21 – Complete Specification)***

Signature Not Verified
Digitally Signed
By:RAHUL
Signing Date:10.05.2024
19:01:22

44. The suit patent describes/contains a closure, which in turn consists of a cap, attached to a capsule. The first tear off seal detaches one portion of the capsule, thereafter, the second tear off seal which attaches the cap to the container is torn off, such that the cap can be removed.

45. The inventive feature of claim 1 is emphasised in the '*characterized*' portion of the claim. This position is also admitted by the Plaintiff in paragraph 14 of the Plaint where the Plaintiff specifically mentions that the inventive feature of the suit patent is in the use of '*a second tear-off seal*' in the tamper-evident closure and that the same is given in the portion of the Claim after the phrase '*characterized in that*'. Paragraph 14 of the Plaint is extracted as under:

> *"14. The suit patent describes a 'double tear-off tamper evident closure for a container.* ***The novelty and inventiveness of the patented invention lies in the presence of a 'second tear-off seal' in the tamper-evident closure****, for attaching the cap to the container and allowing the removal of the cap from the mouth of the container, once it has been torn off (****this is the portion of the claim 1 of the suit patent after the second transition phrase "characterized in that"****).*"

46. Whenever the expression "characterised" is used in a claim it is meant to describe the invention. Such characterisation forms the crux of the invention. The same has been explained in the claim construction segment of ***"Landis on Mechanics of Patent Claim Drafting***" by ***Robert C. Faber***, Third Edition, as under:

> *"In European country applications, including* ***claims separating prior art elements from the inventive contribution by a transition phrase, the transition phrase is usually translated into English as***

Signature Not Verified
Digitally Signed
By:RAHUL
Signing Date:10.05.2024
19:01:22

***something like "characterized in that" or "characterized by comprising**."""*

47. A detailed discussion on the effect of the pre-characterising parts and the characterizing portions of the invention has been undertaken by the UK Court of Appeal in the decision dated 22nd October, 2009 in ***Virgin Atlantic Airways Limited v Premium Aircraft Interiors UK Limited [2009] EWCA Civ 1062***. It is widely regarded that this case provided a seminal discussion on the interpretation and application of patent claims, particularly in distinguishing between essential and non-essential elements of an invention. In the said decision, the UK Court of Appeal held that the pre-characterising portion of a patent claim typically provides background information or context, setting the stage for the invention by describing elements that may already exist in the prior art. As per the said decision, the pre-characterising section helps establish the problem or field to which the invention pertains and may reference known solutions or technologies. On the other hand, the characterizing portion of the patent claim delineates the specific features or aspects of the invention that distinguish it from prior art or existing technologies. These features represent the core of the invention and are responsible for its novelty and inventive step. The relevant extracts of the said decision are set out below:

> *"The next matter follows from the use of a two-part claim, the so-called "precharacterising" and "characterising" parts. Again the question arises because of a rule of the Implementing Regulations. R.29(1) says:*
>
> > *"The claims shall define the matter for which protection is sought in terms of the technical*

Signature Not Verified
Digitally Signed
By:RAHUL
Signing Date:10.05.2024
19:01:22

features of the invention. Wherever appropriate, claims shall contain:
(a) a statement indicating the designation of the subject-matter of the invention and those technical features which are necessary for the definition of the claimed subject-matter but which, in combination, are part of the prior art;
(b) a characterising portion – preceded by the expression "characterised in that" or "characterised by" – ***stating the technical features which, in combination with the features stated in sub-paragraph (a), it is desired to protect****."*

Does the skilled reader when he sees such a two-part claim take this rule into account so that he at least expects the pre-characterising portion to describe matter which is part of the prior art?

xxx xxx xxx

Next the two-part claim structure. The EPO Boards of Appeal have had a little to say about this. In Siemens/Electrode slide (T06/81); 17 September 1981, the applicant had put into his original pre-characterising clause material which was not in fact part of the prior art. He was allowed to amend so as to put that material into the characterising part. The Board said:

"2.2 Under r.29(1)(a) of the Implementing Regulations to the EPC, the preamble of a two-part (independent) claim must contain the technical features of the subject-matter of the claim which, in combination, are part of the prior art. In principle, therefore, it may be assumed that the features included by the applicant in the preamble to the claim as filed, in combination with one another, are no longer new. On the other hand, the claim as originally worded must not be regarded as a binding statement as to the novelty

Signature Not Verified
Digitally Signed
By:RAHUL
Signing Date:10.05.2024
19:01:22

of those features, but simply as an attempt to summarise the essential features of the invention. In the view of the Board, the question of which features are known and hence to be included in the preamble in the event of the application being successful must be decided purely in the light of the objective facts of the case."

In Boehringer/Diagnostic Agent (T99/85), 23 October 1986, a feature of the invention which in fact conferred novelty had been put into the pre-characterising clause. The Board held this did not matter and it did not have to be moved into the characterising clause. The official headnote puts it this way:

"3. In the opposition proceedings there is no reason officially to insist on a change in the wording of the claim simply because one feature in the preamble to a two-part claim does not belong to the state of the art (r.29(1)(a) EPC)."

The Board itself said:

"4. In establishing the novelty of the subject-matter of the disputed patent it was indeed shown that the feature stated in the opening part of claim 1 ... does not, as the appellants claim, belong to the state of the art .... in conjunction with the other features in the preamble. Nevertheless, the Board sees no reason for it solely on this account, to insist, that the wording of a patent claim already granted should be amended. The Board takes r.29(1) EPC for what it is – an implementing regulation, primarily relevant to the patent grant procedure and therefore no more constituting a ground for opposition than for example Art.84 EPC (reference to T 23/86 of 25 August 1986, OJ EPO 1987, 316). Claim 1 can therefore be maintained in the text as granted."

Signature Not Verified
Digitally Signed
By:RAHUL
Signing Date:10.05.2024
19:01:22

> *From this Mr Vanhegan invited us to conclude that the skilled reader would have no, or at the very least only a slight presumption, that the pre-characterising portion of a claim was describing what the patentee considered to be old. He particularly emphasised the Board's statement that it is "primarily relevant to the patent grant procedure."* ***Mr Meade on the other hand submitted that when the skilled man sees a pre-characterising clause he will strongly incline to the view that the skilled man saw that as being old.*** *And that inclination will be reinforced (perhaps steepened is a better word) where the clause concerned is clearly said by the patentee to be based on prior art which he specifically acknowledges.*
>
> *We accept Mr Meade's contention. Even without a two-part claim structure, because the skilled reader knows that the patentee is trying to claim something which he, the patentee, considers to be new, he will be strongly averse to ascribe to the claim a meaning which covers that which the patentee acknowledges is old. And* ***if the patentee not only acknowledges that a particular piece of prior art is old but then has a pre-characterising clause which is fairly obviously based on it, the skilled reader will be even more strongly inclined to read that clause as intended to describe that old art."***

48. Further, in ***F. Hoffmann-La Roche Ltd. & Anr v. Cipla Ltd (2015 SCC OnLine Del 13619)*** the manner of ascertaining the aspects of claim construction to establish the inventive/ essential elements of a patent are discussed extensively. Relevant paragraphs of the said judgement is as under:

> "***66.*** *Before we apply the aforenoted legal position to the facts of the instant case we need to discuss the legal position concerning construction of claims. In the*

Signature Not Verified
Digitally Signed
By:RAHUL
Signing Date:10.05.2024
19:01:22

decision reported as AIR 1969 BOMBAY 255 FH & B v. Unichem Laboratories it was held that specifications end with claims, delimiting the monopoly granted by the patent and that the main function of a Court is to construe the claims without reference to the specification; a reference to the specification being as an exception if there was an ambiguity in the claim. Claims must be read as ordinary English sentences without incorporating into them extracts from body of specification or changing their meaning by reference to the language used in the body of the specification. In a recent decision in FAO (OS) No. 190/2013 Merck v. Glenmark the Division Bench held that claim construction to determine the coverage in the suit patent has to be determined objectively on its own terms with regard to the words used by the inventor and the context of the invention in terms of the knowledge existing in the industry. Abandonment of an application cannot remove what is patented earlier nor can it include something that was excluded earlier and that a patent is construed by the terms used by the inventor and not the inventors subjective intent as to what was meant to be covered. Merely because an inventor applies for a latter patent that is already objectively included in a prior patent, but which inventor subjectively feels needs a separate patent application, doesn't mean it is to be taken at face value and therefore neither Section 3(d) or abandonment of subsequent patent application can be used to read into terms of prior application, which has to be construed on its own terms. In the decision reported as 415 F. 3d 1303 Edward H. Phillips v. AWH Corporation it was held that claims have to be given their ordinary and general meaning and it would be unjust to the public, as well as would be an evasion of the law, to construe a claim in a manner different from plain import of the terms and thus ordinary and customary meaning of the claim term is the meaning of the term to a Person of

Signature Not Verified
Digitally Signed
By:RAHUL
Signing Date:10.05.2024
19:01:22

Ordinary Skill in the Art as of effective date of filing of the patent application. In case of any doubt as to what a claim means, resort can be had to the specification which will aid in solving or ascertaining the true intent and meaning of the language employed in the claims and for which the court can consider patent prosecution history in order to understand as to how the inventor or the patent examiner understood the invention. The Court recognized that since prosecution is an ongoing process, it often lacks clarity of the specification and thus is less useful for claim construction. The Court also recognizes that having regard to extrinsic evidence such as inventor testimony, dictionaries and treaties would be permissible but has to be resorted to with caution because essentially extrinsic evidence is always treated as of lesser significance in comparison with intrinsic evidence. In the decision reported as 457 F.3. 1284 (United States) Pfizer v. Ranbaxy the Court held that the statements made during prosecution of foreign applications are irrelevant as they are in response to unique patentability requirements overseas. The Court also held that the statement made in later unrelated applications cannot be used to interpret claims of prior patent. In the decision reported as 1995 RPC 255 (UK) Glaverbel SA v. British Coal Corp the Court held that a patent is construed objectively, through the eyes of a skilled addressee. The Court also held that the whole document must be read together, the body of specification with the claims. But if claim is clear then monopoly sought by patentee cannot be extended or cut down by reference to the rest of the specification and the subsequent conduct is not available to aid the interpretation of a written document.

xxx xxx xxx

Signature Not Verified
Digitally Signed
By:RAHUL
Signing Date:10.05.2024
19:01:22

68. *In the case of (52 F.3d 967 also 517 US 370) Herbert Markman v. Westview the Courts held that an infringement analysis entails two steps:-*

(a) First step is to determine the meaning and scope of the patent claims asserted to be infringed.

(b) Second step is to compare the properly construed claim with the device accused of infringing.

(xv) The parts of the claim include its preamble, transition phrase and the body. The 'transition phrase' includes terms like:-

(a) Comprising;

(b) Consisting;

(c) Consisting essentially of;

(d) Having;

(e) Wherein;

(f) Characterised by;

Of these terms some are open ended, such as 'comprising' which means that if the claim contains three elements 'A', 'B' and 'C' it would still be an infringement for someone to add a fourth element 'D'.

Further some terms are close ended such as 'consisting of', i.e. in a claim of three elements, 'A', 'B' and 'C' a defendant would infringe if he has all three elements. In case the defendant adds a fourth element 'D' he would escape infringement.

(xvi) Each claim has a priority date so that in a group of claims in a specification you could have multiple priority dates. This only means that if a patent application with certain priority date and claims was followed by another application with different claims

Signature Not Verified
Digitally Signed
By:RAHUL
Signing Date:10.05.2024
19:01:22

> *and different priority dates, then if they were consolidated or cognate with another application, each claim would retain the original priority date [Section 11(1)].*"

In view of the above, it is seen that for establishing infringement both steps have to be satisfied i.e., construing the claims and the infringing product to be within the scope of the claims as construed.

Comparison of the suit patent and the Defendants product

49. Various elements in the plaint have been matched with the closures by means of photographs placed on record and the physical bottle caps/ closures which were submitted in court. The physical closures of the Plaintiff have been handed across to the Court for the purpose of demonstration. The patented closures of the Plaintiff, and the features thereof, have also been demonstrated to the Court by means of a video, with each of the steps being explained therein.

50. Both parties have filed their expert affidavits. However, at this stage, unless the said experts are cross-examined, the Court is unable to rely upon the said expert affidavits, owing to the nature of the product involved. Since this is only at a *prima facie* stage, the Court is primarily going by the Plaintiff's suit patent and the Defendants' product – closure, which is an assured and correct way of assessing infringement of the patent.

51. The elements of the suit patent are best described diagrammatically. Accordingly, figures from the complete specification of the suit patent are referred for the present analysis. Firstly, Fig 7a of the complete specification is referred to which is extracted hereinbelow:

Signature Not Verified
Digitally Signed
By:RAHUL
Signing Date:10.05.2024
19:01:22

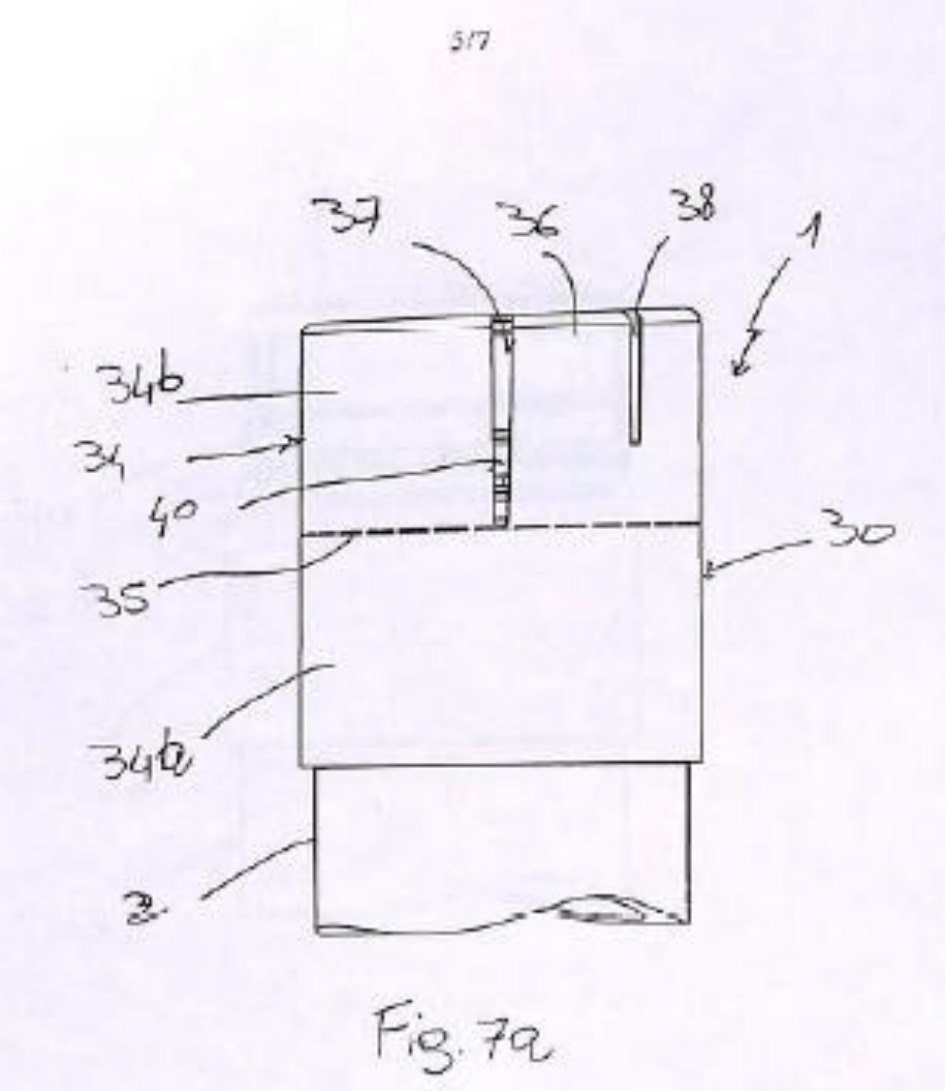

Elements as per the specification (reference to Fig. 7a)

52. As observed in figure 7a above, reference numeral 30 above demonstrates a longish cap which has a perforation at reference numeral 35 described as a circumferential line. Reference numeral 36 in the figure is a tear off tab. When this tear off tab is pulled down and tore on the perforated line, the entire sleeve i.e., numeral 34 is disjoined from the lower portion numeral 34a. Upon the removal of the upper sleeve reference numeral 34, the following figure 5a depicts the closure:

Signature Not Verified
Digitally Signed
By:RAHUL
Signing Date:10.05.2024
19:01:22

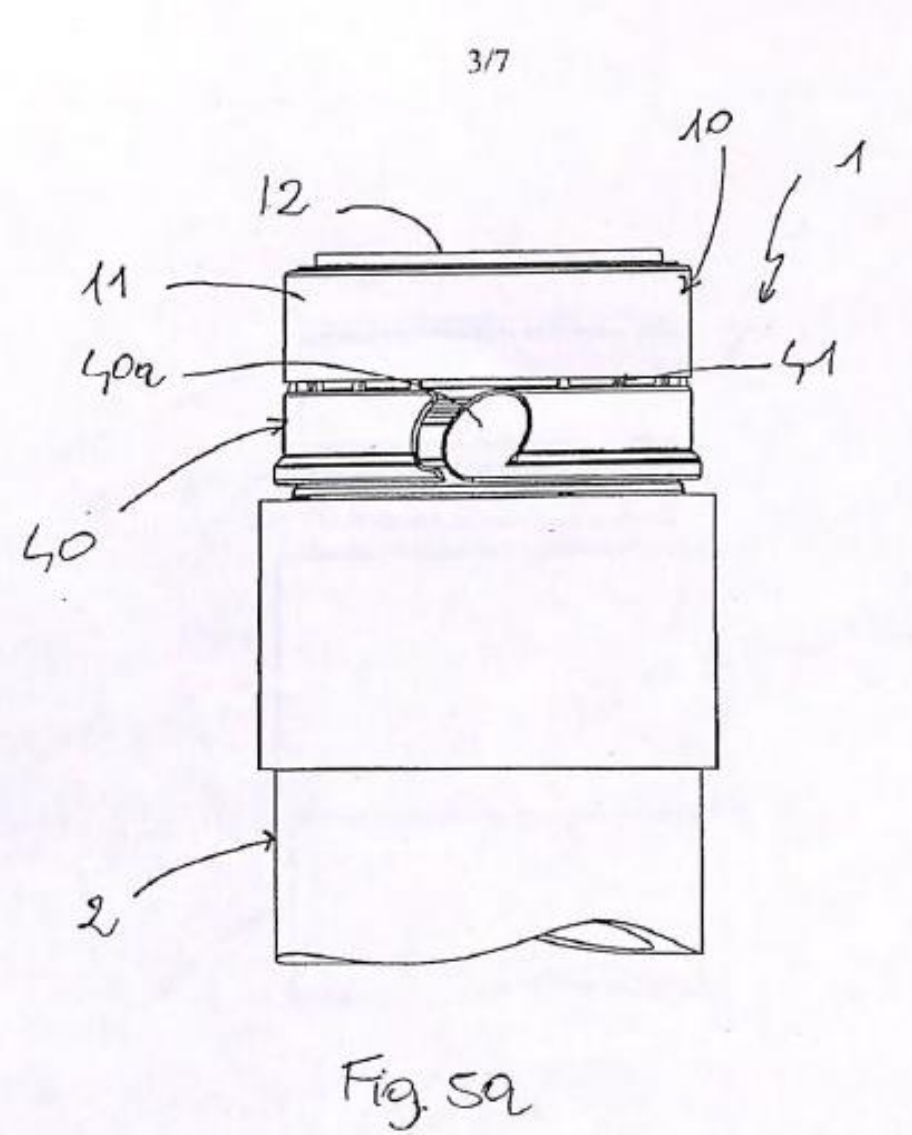

53. In this figure 5a above, it is seen that reference numeral 10 is the container cap, reference numeral 40a is the second tear off seal which upon being torn, separates the perforation from the cap thereby allowing the user to open the container. Upon the second tear off tab being opened, the depiction would be as under:

Signature Not Verified
Digitally Signed
By:RAHUL
Signing Date:10.05.2024
19:01:22

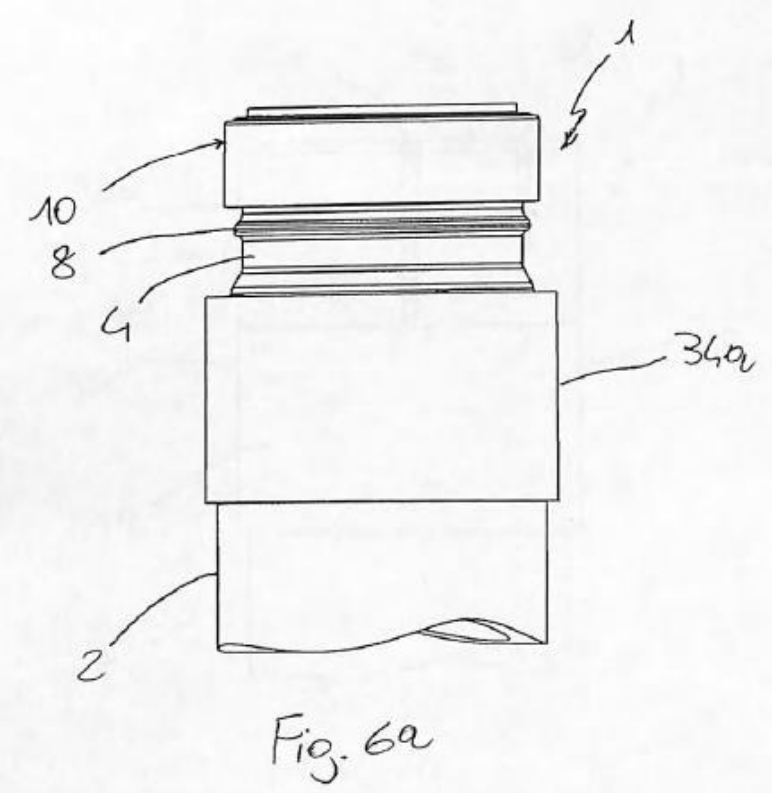

Fig. 6a

Infringement Analysis

54. The above-mentioned mechanism as described in the Plaintiff's patent is to be compared with the Defendants' closure and its mechanism. The following aspects need to be noted:

i. When the outer seal of the Defendants' closure is removed, only the upper sleeve is separated from the entire closure. The bottle cap and the sleeve continue to be attached to each other.

ii. Once the outer upper sleeve and the perforation between the cap and the lower sleeve are removed, the cap is separated from the lower sleeve.

iii. The second tamper evident seal in the Defendants' closure enables the separation of the cap from the lower sleeve and, thus, enables the user to open the cap. In the Plaintiff's closure, however, when

Signature Not Verified
Digitally Signed
By:RAHUL
Signing Date:10.05.2024
19:01:22

the first tamper evident seal is opened it separates the upper and the lower sleeve as also the lower sleeve from the inside bottle cap. This can be illustrated from the following Steps:

Steps	**Plaintiffs Closure**	**Defendants' closure**
Closures as manufactured		
Open the first tamper evident seal	The lower sleeve gets separated from the upper sleeve and also from the bottle Cap. 	The outer upper seal gets removed, the bottle cap and the lower sleeve continue to be attached. 

Signature Not Verified
Digitally Signed
By:RAHUL
Signing Date:10.05.2024
19:01:22

After opening of first seal image of the closures	  The bottom sleeve moves downward and only the cap is fixed with the second seal to the container. At this stage, the upper sleeve of the has been disconnected from the lower sleeve.	  When the first seal is opened, the inner cap and the lower sleeve are still connected by the second tear off tab.
Open the second tamper evident seal[1]	When the second seal is opened, the bottle cap is separated from the bottle container enabling it to be opened. 	When the second seal is opened, the bottle cap gets separated from the lower sleeve, enabling the user to open the container. 

[1] Note: Colors and get up of the closures are not relevant.

Signature Not Verified
Digitally Signed
By:RAHUL
Signing Date:10.05.2024
19:01:22

55. It can be easily observed from the closures submitted in the Court as also a reading of the Complete Specification of the suit patent that the second tear off seal of the Plaintiff's closure disconnects the cap from the container. But the second tear off seal in the Defendants' closure separates the cap from the lower sleeve. This is thus a very basic structural difference between the patented closure of the Plaintiffs and the Defendant's closure. The characterisation also further shows that the purpose of the second tear off seal in the Plaintiff's patent is different from that in the Defendants' product. The similarities and differences between the suit patent and Defendants' product for reference are tabulated hereinbelow:

Plaintiff's Patent	**Defendant's Closure**
Tamper evident closure	Tamper evident closure
For a container having a mouth	For a container having a mouth
A cap for closing the mouth (10)	A cover for closing the mouth (14)
A capsule associated with a cap (30)	Bottom sleeve portion (13) and the cover (14)
Tamper evident seal (1)	Tamper evident seal (15)
Tear off seal (36)	Hood like indicator cap second tamper evident indicator.
First tear of seal removes one portion of the capsule (3) after tearing off.	Hood like indicator cap is removed making the internal cap and sleeve accessible.
The second tear off seal is attached to the cap of the container thereby allowing removal of the cap after it has been torn off.	A circumferential ring is provided at the interior of the cap which is on the container which is torn off after the first tear off seal is removed. This ring separates the cap from the lower sleeve

Signature Not Verified
Digitally Signed
By:RAHUL
Signing Date:10.05.2024
19:01:22

56. The above-mentioned differences between the Plaintiff's and the Defendants' closures are fundamental considering the manner in which the claims are worded. Further, in view of the claim construction above, it is observed that the characterisation and purpose itself, of the suit patent, is different from the Defendants' closure. Accordingly, it is observed that the claimed elements of the independent claim 1 of the suit patent do not map on to the Defendants' closure. It is an admitted fact that tamper evident closures are well known in the market. There could be different methods of using tamper proof seals. A monopoly cannot be claimed on manufacture and sale of tamper proof seals *per se*. It is only on the patented tamper proof seal that a monopoly can be claimed.

57. From the above it can be observed that the Plaintiff's patent IN'522 and the Defendants' patent IN'637 have similar yet distinctively different features. They both relate to closures but they are not identical in their construction and structural features. The Plaintiff's patent cannot confer a monopoly on tamper proof closures. There are various tamper evident seals which exist and have their own distinctive features. Furthermore, the fact that the Plaintiff's patent was cited as the prior art in the examination report of the corresponding EPO application of the Defendants, and the same was granted after overcoming the objections in itself demonstrates the differences in both the closures. It is however made clear that though the Defendant also has a patent, the present analysis is restricted to the Plaintiff's patent IN'522 and the Defendants' closure.

Improvement over the Suit Patent

58. In addition to the above analysis, the Court has considered the Plaintiff's contention regarding the patents granted to the Defendants in

Signature Not Verified
Digitally Signed
By:RAHUL
Signing Date:10.05.2024
19:01:22

various jurisdictions. It has been the case of the Plaintiff that despite these patents, if the Defendants' patents are improvements over the suit patent, they would still require permission from the Plaintiff to launch products implementing such improvement patents.

59. In the present suit, the features in the Defendants' closure when compared to the suit patent, shows that there are distinct operational mechanisms. While the Plaintiff argues that the Defendants' products infringe upon the suit patent, a comparative assessment reveals that the Defendants' products incorporate unique features that establish distinct methodologies. Hence, the Defendants' product incorporates genuine technical advancements that differentiate it from the suit patent and *prima facie*, the Defendants product cannot be termed as merely an improvement over the Plaintiff's basic patent, but a non-infringing product.

Conclusion

60. In comparing the suit patent with the Defendants' closure, it is evident that fundamental distinctions exist in both mechanism and purpose. Firstly, the Defendants' closure demonstrates a sequential separation process upon removal of its outer seal (first tear off seal), wherein only the upper sleeve detaches, while the bottle cap remains affixed to the lower sleeve. This contrasts starkly with the Plaintiff's patented closure, where the initial tear-off seal results in the simultaneous separation of both upper and lower sleeves, as well as the disengagement of the lower sleeve from the bottle cap. Secondly, while the second tamper-evident seal in the Defendants' closure facilitates cap opening by enabling separation from the lower sleeve after the upper sleeve's removal, the Plaintiff's patent employs a different strategy. In the Plaintiff's patent, the second tear-off seal specifically serves

Signature Not Verified
Digitally Signed
By:RAHUL
Signing Date:10.05.2024
19:01:22

to attach the cap to the lower part of the capsule or sleeve following the removal of the upper portion of the capsule, ensuring tamper evidence.

61. These technical and functional disparities underscore the substantive differences between the suit patent and the Defendants' product. Notably, the sequential separation mechanism in the Defendants' closure contrasts with the simultaneous detachment characteristic of the Plaintiff's invention, thereby affirming distinct operational methodologies. Furthermore, the differing purposes of the second tear-off seals in each arrangement reinforces the unique functionalities of the Plaintiff's closure for tamper evidence, as opposed to the Defendants' mechanism primarily aimed at facilitating cap opening. Consequently, these disparities elucidate a clear demarcation between the Plaintiff's patent claim and the Defendants' product, thereby absolving the Defendants of any allegations of infringement.

62. The purpose, mode of attachment and mechanism of the second tear off seal in the Plaintiff's patent is different from the purpose, mode of attachment and mechanism of Defendants' product. In the Plaintiff's patent, the purpose of the second tear off seal is to remove the connection between the cap and the container. In the Defendants' case, the second tore off seal attaches the lower sleeve of the capsule and, thereafter, loosens the cap to enable the user to open the cap of the container.

63. For infringement to be established it is required that a Plaintiff must demonstrate that the Defendant's product/closure falls within the scope of the claims of the Plaintiff's patent are present in the Defendant's product, and that the Defendant's product operates in the same way as the patented invention.

Signature Not Verified
Digitally Signed
By:RAHUL
Signing Date:10.05.2024
19:01:22

64. In this case, a detailed analysis of the suit patent and the Defendants' product reveals significant differences in both mechanism and purpose, as outlined previously. The sequential separation process and distinct functionality of the second tear-off seal in the Defendants' closure stand in contrast to the simultaneous detachment and tamper-evident function of the Plaintiff's patented closure.

65. Since the main characterisation lies in the second tear off seal, the function, purpose, and the mechanism of the suit patent being completely different, at this stage, the Court is, *prima facie*, unable to conclude that the Defendants' product infringes the Plaintiff's patent.

66. The present case does not satisfy the principles for grant of injunction have been discussed in the decision in ***American Cyanamid Company v. Ethicon Ltd., (1975) 1 All. E.R. 504***. Consequently, *prima facie*, there is no case of infringement made out, as the Defendants' product operates differently and does not incorporate all essential elements of the Plaintiff's patent claims. Moreover, the balance of convenience heavily favours the Defendants on account of their substantial sales and market presence. They have been producing their closure products and have filed their sales figures, indicating an established business that would be jeopardized by a finding of infringement.

67. Considering the significant operational disparities between the Plaintiff's patent and the Defendants' product/ closure, any injunction or legal action for infringement would unduly harm the Defendants' business interests. Additionally, no irreparable harm is demonstrated, as the Defendants' closure does not directly compete with the Plaintiff's patented closure. At best, considering the priority of the Plaintiff's patent basis the

Signature Not Verified
Digitally Signed
By:RAHUL
Signing Date:10.05.2024
19:01:22

priority date of the suit patent, the Plaintiff may be entitled to royalty payments for any use of their patented technology by the Defendants, if after trial it is established that the Defendant's product is infringing. However, the same also can only be demonstrated by a full trial and at the *prima facie* stage, this Court is unable to concur with the contention of the Plaintiff that the product of the Defendants is merely an improvement on the suit patent. Therefore, in light of the foregoing analysis, the triple test for grant of injunction is not met, and the balance of convenience strongly favours the Defendants.

Directions

68. The prayer for interim injunction is rejected. However, the Defendants shall file statement of accounts periodically i.e., every 6 months by way of an affidavit, of a duly authorized and competent official. For the past manufacture till 30th June 2024, the affidavit of sales both in terms of value and quantity shall be filed by 15th July 2024. Going forward, the accounts shall be furnished every six months, until the disposal of the suit.

69. For the purposes of infringement analysis in paragraph 54 above, the services of the Court photographer have been availed of.

70. It is clarified that the findings of the present judgment are *prima facie* in nature and solely for the purposes of adjudicating the application for interim injunction. The above findings shall not affect the final disposal of the suit post-trial.

71. The samples of the caps/tear off seals which have been used in the adjudication of the present application for interim injunction shall be retained by the Court and kept in the safe custody of the ld. Registrar

Signature Not Verified
Digitally Signed
By:RAHUL
Signing Date:10.05.2024
19:01:22

(Original Side) of this Court. The said caps/tear-off seals shall be sent to the Court when the matter is listed before Court.

72. ***I.A. 17450/2021*** is disposed of.

CS(COMM) 706/2021 and CC(COMM) 6/2022

73. The present suit is released from part heard.

74. List before Roster Bench on 22nd July, 2024.

PRATHIBA M. SINGH
JUDGE

MAY 08, 2024
dj/dk/am/bh

Signature Not Verified
Digitally Signed
By:RAHUL
Signing Date:10.05.2024
19:01:22